ROHS Compliant

DATE	2023/08/11
Revision	B

Spceifications :

1.Housing : UL 94-V-0 Polycarbonate (PC)
2.Contact : Phosphor Bronze Gold plate over Nickel
6u" 15" 30u" 50u" available
3.Insulation resistance: 500 Mega Ohm
4.Dielectric withstanding voltage: 500V AC
5.Operating temperature: -40°~+125° C
6.Durability: 1000 cycles min.
7.Comply with FCC part 68 standard.

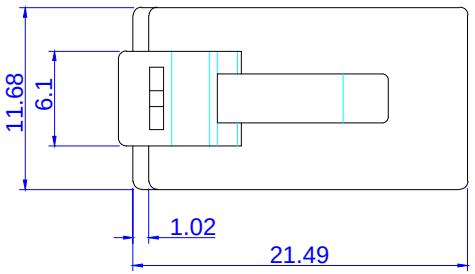

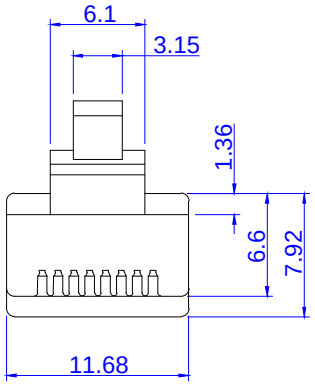

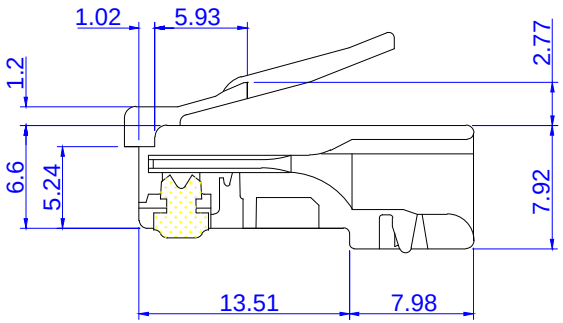

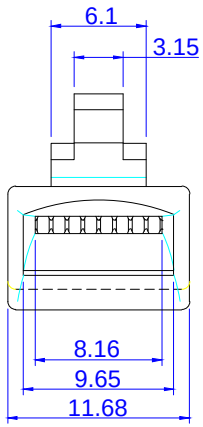

PLUG 8P8C-R

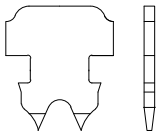

2 prongs For Stranded Wires

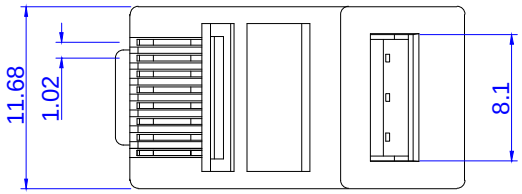

TOLERANCE	
.XXX	0.10
.XX	0.25
.X	0.38

P/NO. SY-RJ-45-1

MATERIAL			
HOUSING	☐ PC UL94V-0 ■ PC UL94V-2	TYPE OF PLUG	☐ SHIELD ■ UNSHIELD
CONTACT	PHOSPHOR BRONZE FINE GOLD PLATED OVER NICKEL	GOLD-PLATING	☐ 0.15U M/6U" MINIMUM ☐ 0.38U M/15U"MINIMUM ☐ 0.76U M/30U"MINIMUM ■ 1.27U M/50U"MINIMUM
APPLICATION	■ UTP CAT.5E ☐ UTP CAT.6 ☐ STP CAT.5E ☐ STP CAT.6 ☐ SOLID ■ STRANDED		

REV.	DESCRIPTION	ENG.	APPROVAL

ITEM. Modular Plug	CO. SY	S/N. SY-RJ-45-1
DR.	APPD. Sweet 2023/08/11	CHKD.
Shiunn Yang Ent.Co.Ltd. TEL: 29089890 <REP> FAX: 29088679		FILE. SY-RJ-45-1
		SCALE /
		UNIT mm / SIZE A4