ROHS Compliant

Date	2012/07/12
Revision	A

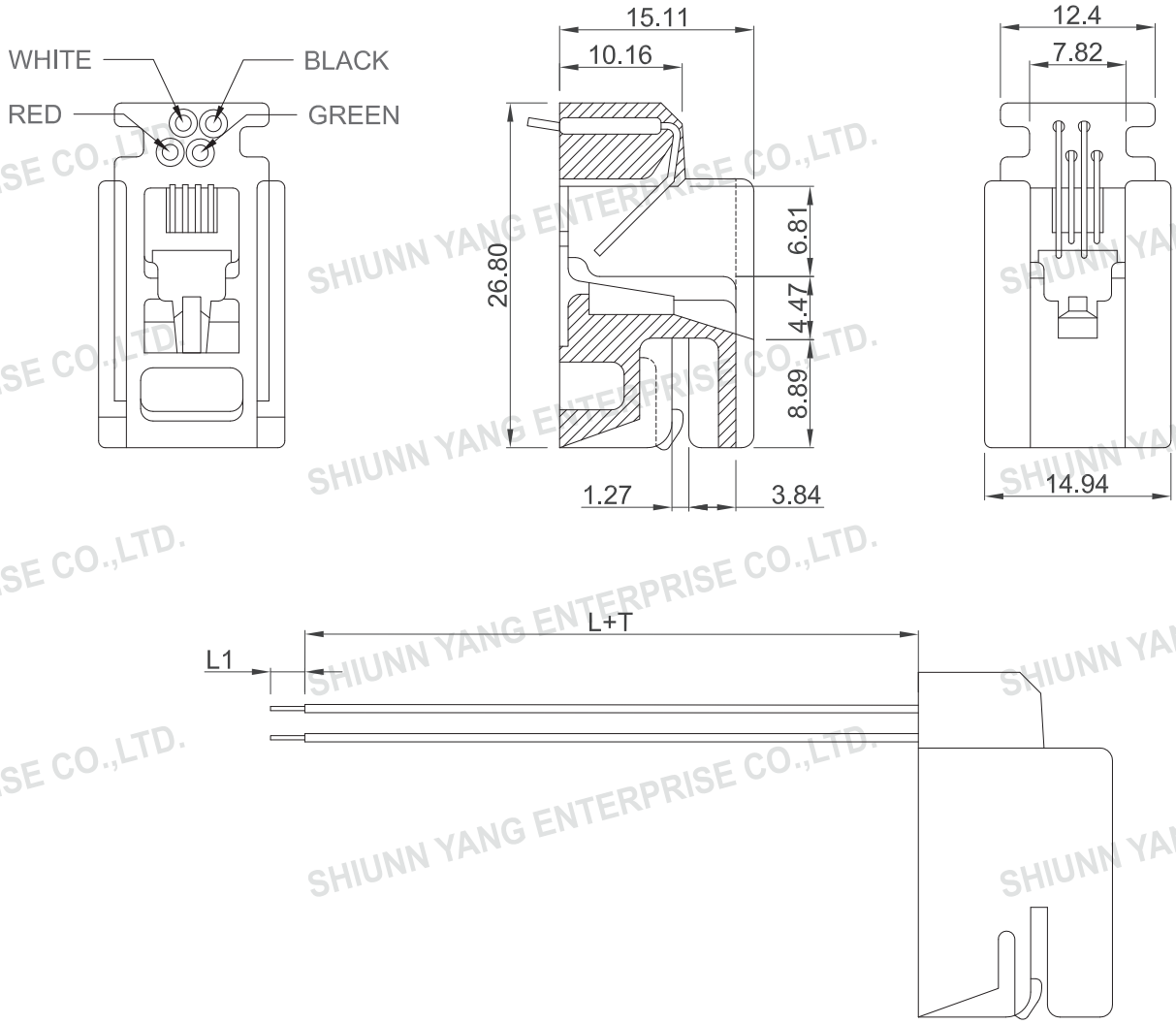

SHIUNN YANG ENTERPRISE CO.,LTD.

TOLERANCE	
.XXXX	----
.XXX	0.10
.XX	0.25
.X	0.38

P/NO. 616D

	TECHNICAL DATA
HOUSING	STANDARD MATERIAL 15% GLASS FILLED PBT ■ UL94V-0 ☐ UL94V-2 COLOR ☐ GRAY ☐ BLACK
CONTACT	☐ ROUND WIRE : 0.46mm DIAMETER PHOSPHOR BRONZE GOLD PLATED OVER NICAL.
	☐ FLAT WIRE : 0.35mm THICKNESS PHOSPHOR BRONZE GOLD PLATED OVER NICAL.
	TIN PLATED OVER NICKEL ON SOLDER AREA.
GOLD-PLATING	☐ 0.0762um/3u inch ☐ 0.15um/6u inch ☐ 0.38um/15u inch ☐ 0.76um/30u inch ☐ 1.27um/50u inch
WIRE	UL-1061 E41396 AWM80°C VW-1 300V 26AWG, PVC Insulation

ITEM.Modular Wiring Jack	CO. SY	FILE. 616D	
DR. Wakka 2012/07/12	APPD.	CHKD.	
Shiunn Yang Ent.Co.Ltd. TEL: 29089890 <REP> FAX: 29068849,29088679		SCALE /	
		UNIT mm	SIZE A4
		SHEET	REV.