ROHS Compliant

DATE	2012/08/09
Revision	A

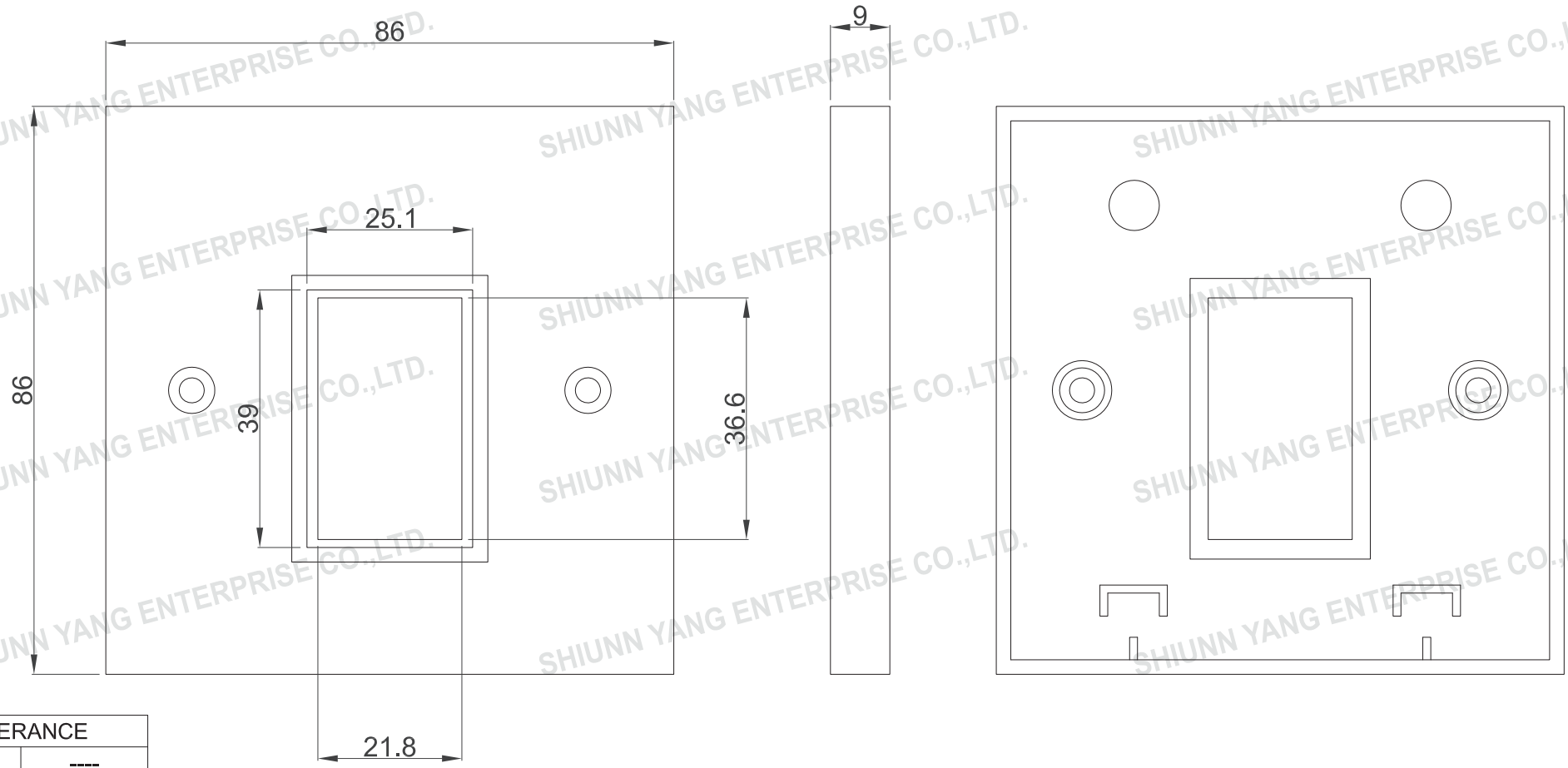

TOLERANCE	
.XXXX	-----
.XXX	0.10
.XX	0.25
.X	0.38

P/NO. SY-WUK1

MATERIAL	
HOUSING	ABS UL-94V-0
COLOR	☐ WHITE ☐ IVORY

REV.	DESCRIPTION	ENG.	APPROVAL

ITEM. Wall Plate	CO. SY	S/N. SY-WUK1
DR. Wakka 2012/08/09	APPD.	CHKD.
		FILE. SY-WUK1
		SCALE /
		UNIT mm / SIZE A4

Shiunn Yang Ent.Co.Ltd.
TEL: 29089890 <REP>
FAX: 29068849,29088679

ROHS Compliant

DATE	2012/08/09
Revision	A

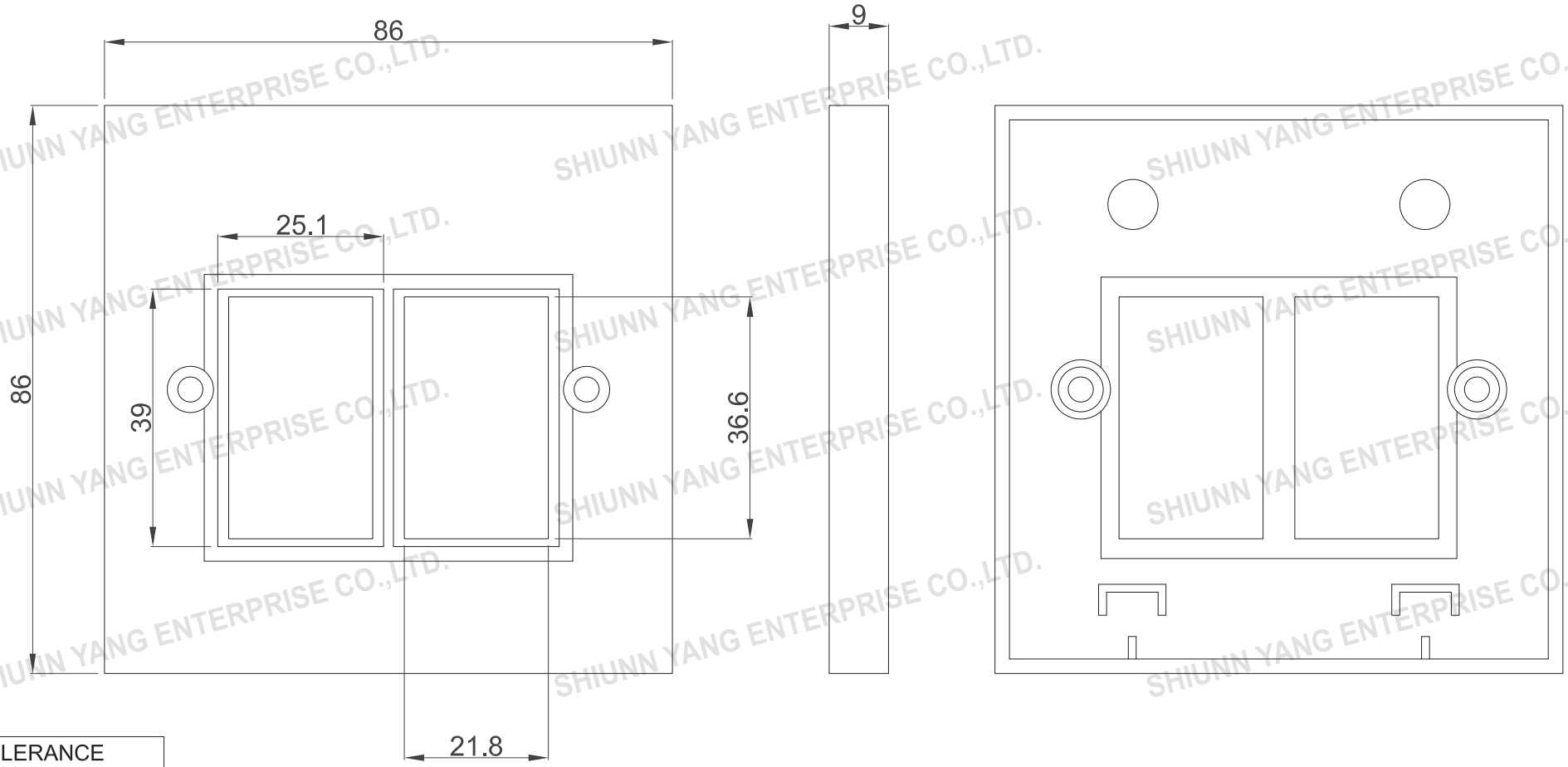

TOLERANCE	
.XXXX	-----
.XXX	0.10
.XX	0.25
.X	0.38

P/NO. SY-WUK2

MATERIAL	
HOUSING	ABS UL-94V-0
COLOR	☐ WHITE ☐ IVORY

REV.	DESCRIPTION	ENG.	APPROVAL

ITEM. Wall Plate	CO. SY	S/N. SY-WUK2
DR. Wakka 2012/08/09	APPD.	CHKD.
		FILE. SY-WUK2
		SCALE /
		UNIT mm / SIZE A4

Shiunn Yang Ent.Co.Ltd.
TEL: 29089890 <REP>
FAX: 29068849,29088679