ROHS Compliant

Date	2009/08/12
Revision	A

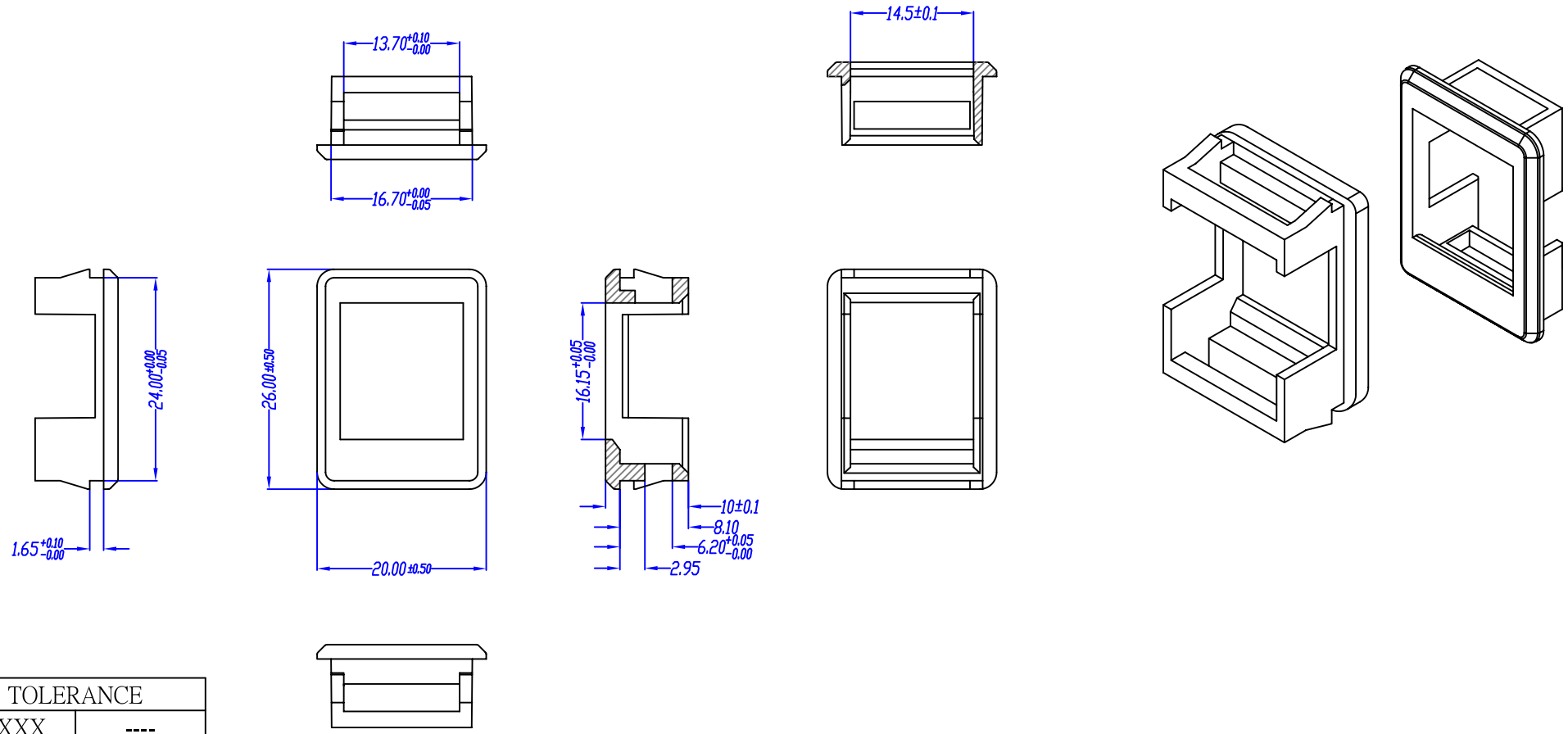

TOLERANCE	
.XXXX	----
.XXX	0.10
.XX	0.25
.X	0.38

P/NO. SY-KCC-WH

TECHNICAL DATA	
HOUSING	ABS 94V-0

REV.	DESCRIPTION	ENG.	APPROVAL

TITLE. INSERT HOLDER	CO. SY	FLIE. SY-KCC-WH
DR. Breaker2009/08/12	APPD.	CHKD.
Shiunn Yang Ent.Co.Ltd. TEL: 29089890 <REP> FAX: 29068849,29088679		SCALE 1/1
		UNIT mm / SIZE A4
		SHEET / REV.