Date	2006/01/05
Revision	A

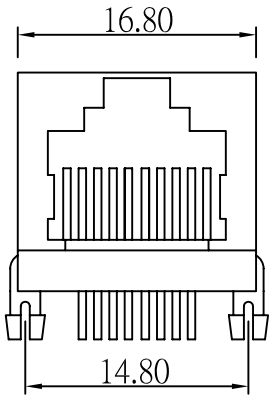

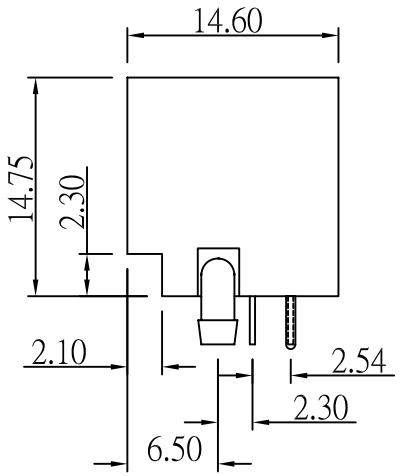

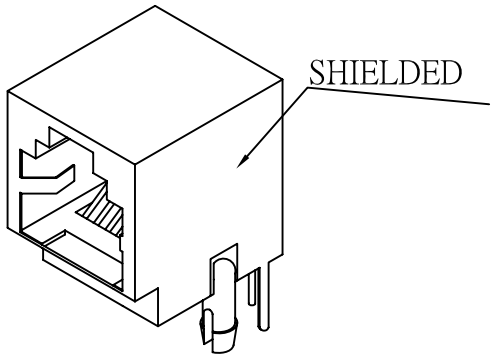

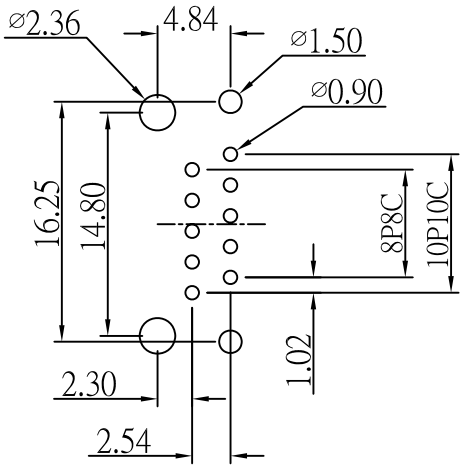

PCB LAYOUT / TOP VIEW

TOLERANCE	
.XXXX	----
.XXX	0.10
.XX	0.25
.X	0.38

P/NO. SY013S-8

TECHNICAL DATA			
HOUSING	STANDARD MATERIAL 15% GLASS FILLED PBT ☐UL94V-0 ☐UL94V-2	COLOR	☐GRAY ☐BLACK
CONTACT	0.46 DIAMETER PHOSPHOR BRONZE GOLD PLATED OVER NICKEL		
GOLD-PLATING	☐ 0.0762 um / 3u inch ☐ 0.15 um / 6u inch ☐ 0.38 um / 15u inch ☐ 0.76 um / 30u inch		
	☐ 1.27 um / 50u inch		
SHIELDING	0.25mm THICHNESS COPPER ALLOY WITH TIN PLATED		

REV.	DESCRIPTION	ENG.	APPROVAL

ITEM.SHIELDED PCB JACK	CO. SY	FILE. SY013S-8
DR. Hansum2006/01/05	APPD.	CHKD.

Shiunn Yang Ent.Co.Ltd.
TEL: 29089890 <REP>
FAX: 29068849,29088679

SCALE /			
UNIT mm		SIZE A4	
SHEET		REV.	