ROHS Compliant

Date	2009/04/14
Revision	A

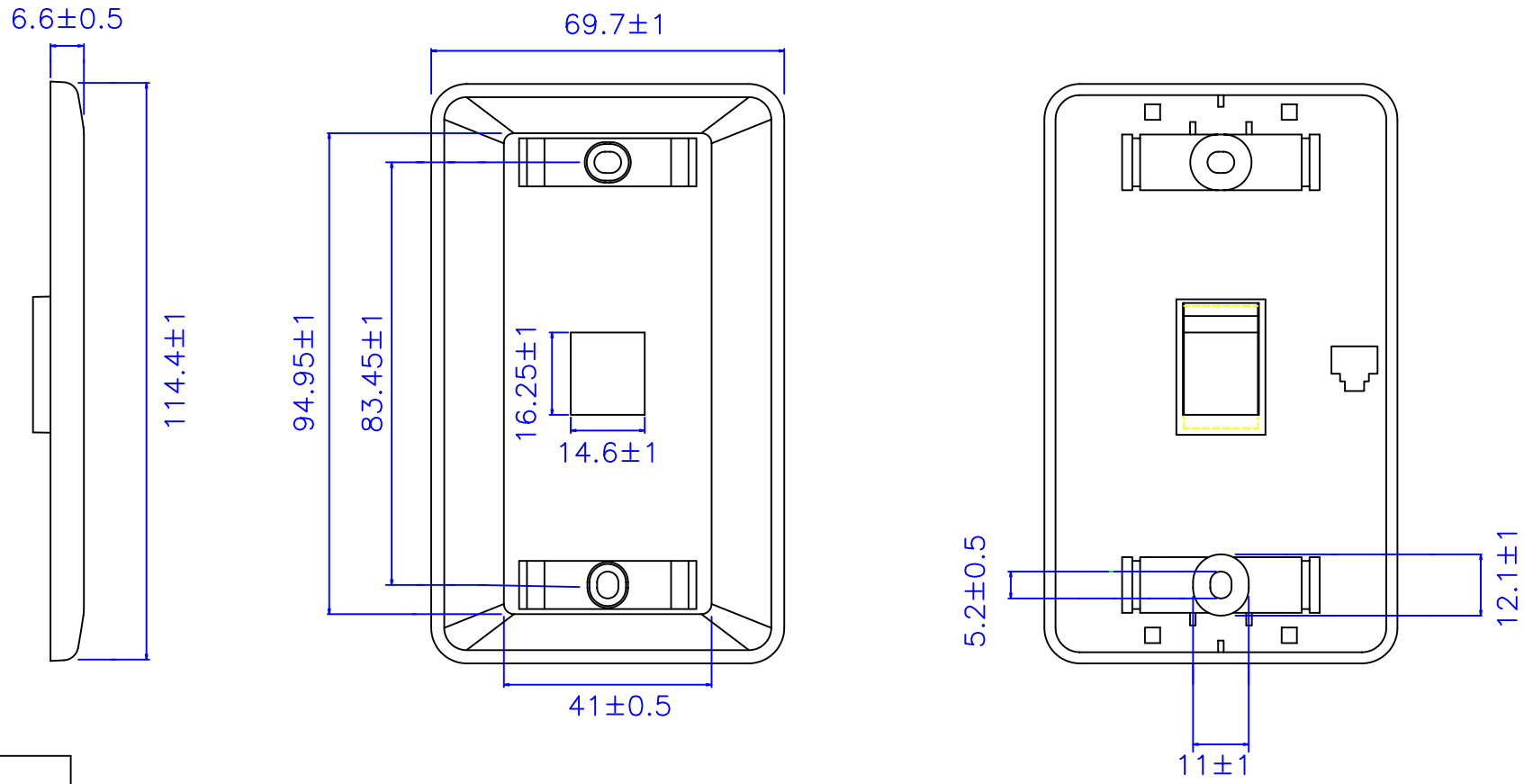

TOLERANCE	
.XXXX	----
.XXX	0.10
.XX	0.25
.X	0.38

P/NO. SY-S1

MATERIAL			
MATERIAL	ABS UL-94V-0	COLOR	☐ WHITE ☐ IVORY
ENCLOSURE	☐ SCREW (3.5x20mm) x 2 9000352000 ☐ SCREW (3.5x25mm) x 2 90035025TP2 ☐ SCREW (6x25mm) x 2 7000602500		
	☐ CLEAR COVER x2, WHITE PAPER(9.5x37mm) x2 ☐ WHITE COVER ☐ IVORY COVER		

TITL. FACE PLATE	CO. SY	FILE. SY-S1
DR. Breaker2009/04/14	APPD.	CHKD.
Shiunn Yang Ent.Co.Ltd. TEL: 29089890 <REP> FAX: 29068849,29088679	SCALE /	
	UNIT mm	SIZE A4
	SHEET	REV.