ROHS Compliant

Date	2009/03/17
Revision	A

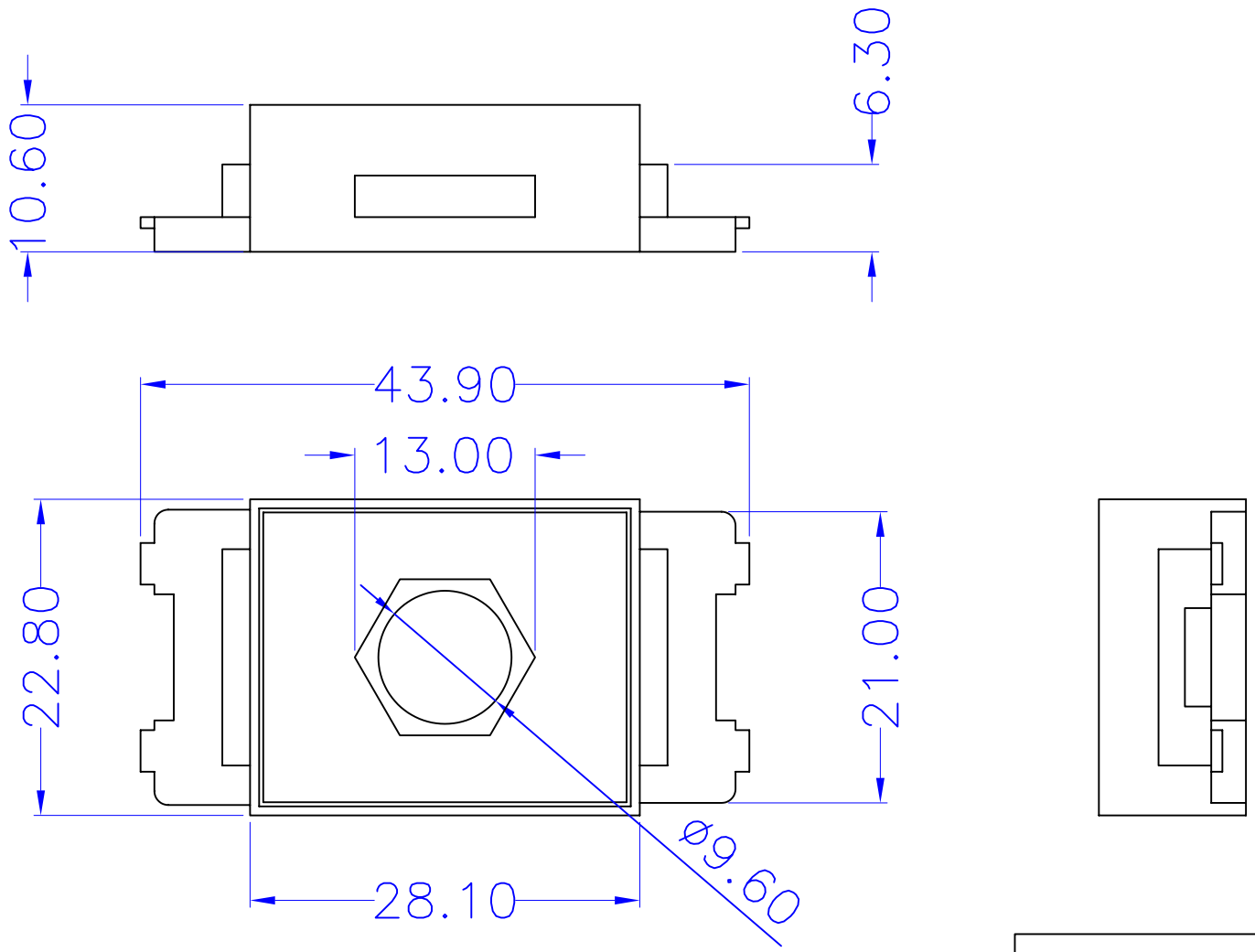

TOLERANCE	
.XXXX	----
.XXX	0.10
.XX	0.25
.X	0.38

P/NO. SY-NWT-TV

TECHNICAL DATA
UL-94-V-0 fire-resistance ABS
Snap-In module type：F
Standard color：white

REV.	DESCRIPTION	ENG.	APPROVAL

ITEM	CO. SY	FILE. SY-NWT-TV
DR. Breaker2009/03/17	APPD.	CHKD.
Shiunn Yang Ent.Co.Ltd. TEL: 29089890 <REP> FAX: 29068849,29088679		SCALE /
		UNIT mm / SIZE A4
		SHEET / REV.