ROHS Compliant

Date	2010/04/21
Revision	A

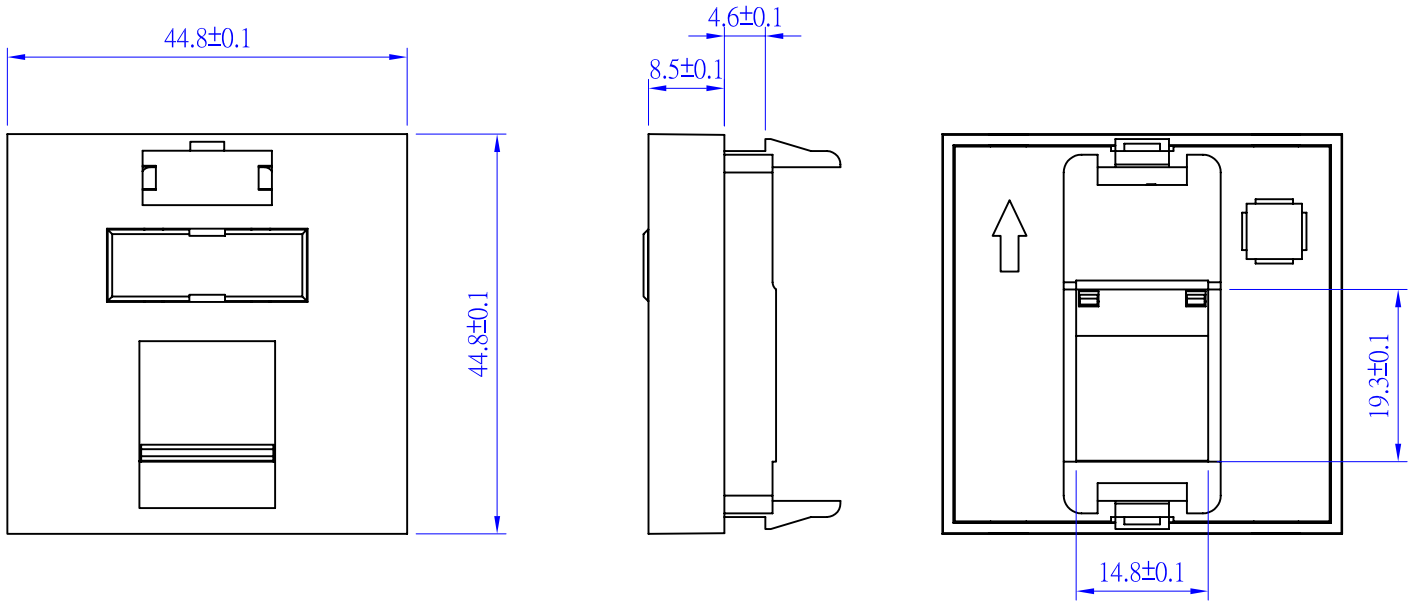

ACCESSORY :

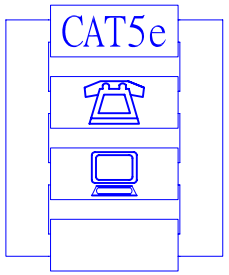

BLUE

TOLERANCE	
.XXXX	----
.XXX	0.10
.XX	0.25
.X	0.38

P/NO. SY-FM1

MATERIAL

Apply UL-94V-0 high-impact,fire-retardant ABS material

Compatible with BNC, ST, SC, Keystone, TV, and blank inserts for future expansion

REV.	DESCRIPTION	ENG.	APPROVAL

TITLE. FACE PLATE	CO. SY	FILE. SY-FM1
DR. Breaker2010/04/21	APPD.	CHKD.
		SCALE /
		UNIT mm / SIZE A4
		SHEET / REV.

Shiunn Yang Ent.Co.Ltd.
TEL: 29089890 <REP>
FAX: 29068849,29088679