ROHS Compliant

Date	2006/07/05
Revision	A

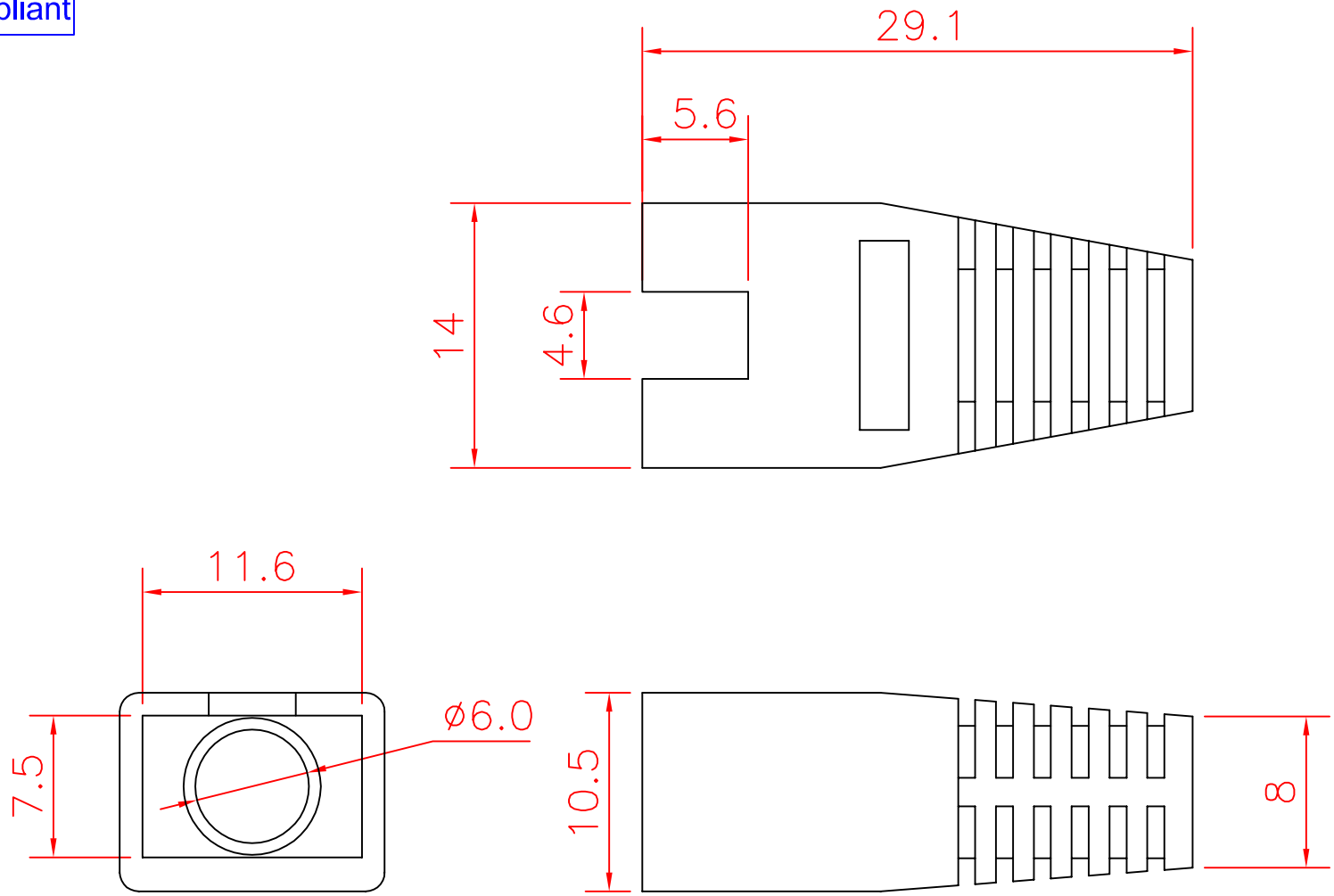

SPECIFICATION DATA	
HOUSING	Fire-resistance PVC
CONTACT	PHOSPHOR BRONZE FINE GOLD PLATED OVER NICKEL
COLOR	☐ GRAY ☐ BLACK ☐ RED ☐ GREEN ☐ YELLOW
	☐ BLUE ☐ WHITE ☐ ORANGE ☐ OTHER _____

TOLERANCE	
.XXXX	----
.XXX	0.10
.XX	0.25
.X	0.38
----	0.50

REV.	DESCRIPTION	ENG.	APPROVAL

P/NO. SY-CCB1

ITEM BOOT & SR CAP	CO. SY	S/N. SY-CCB1
DR. Hansum2006/07/05	APPD.	CHKD.
		FILE SY-CCB-XX
		SCALE /
		UNIT mm / SIZE A4

Shiunn Yang Ent.Co.Ltd.
TEL: 29089890 <REP>
FAX: 29068849,29088679