Date	2009/09/15
Revision	A

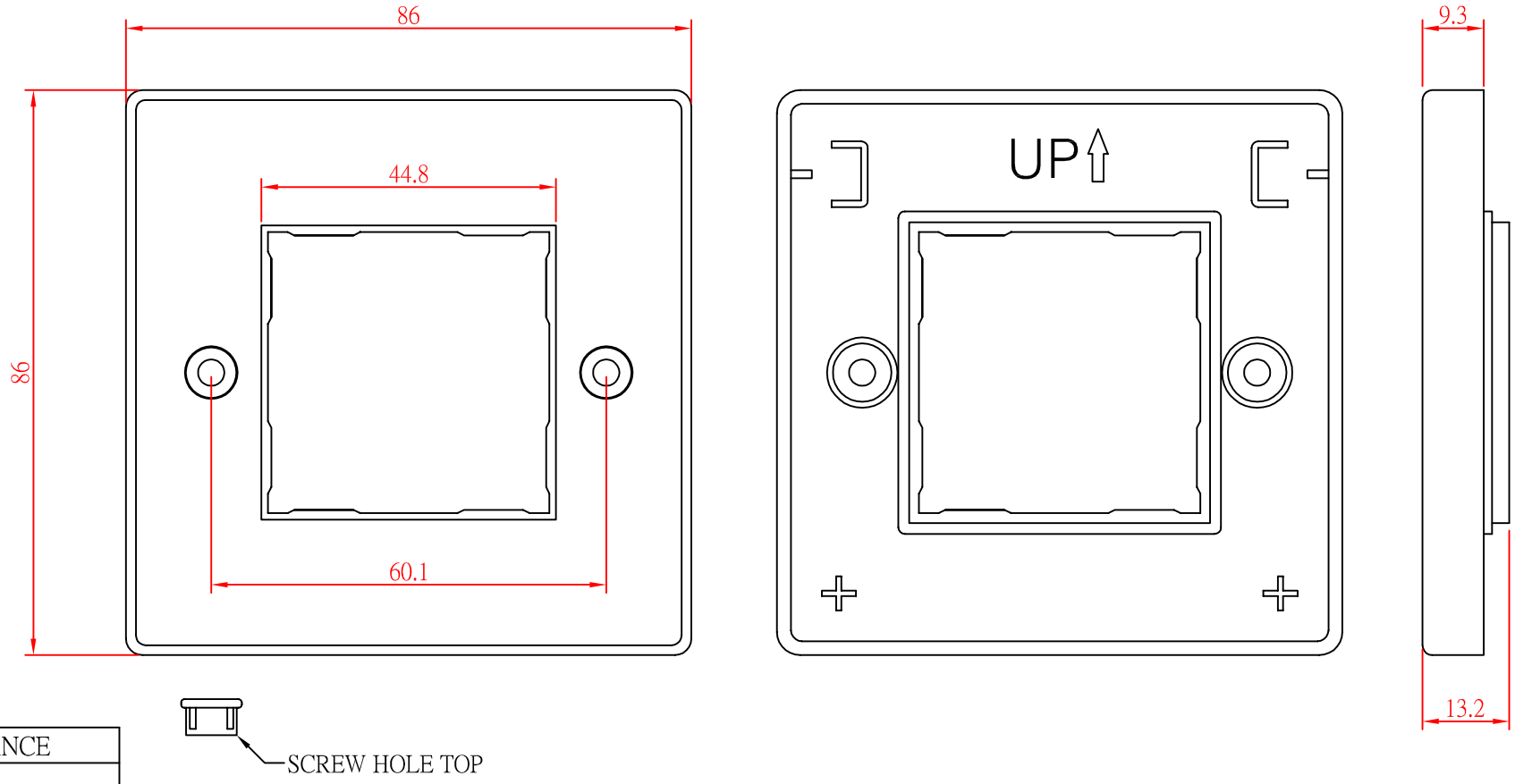

TOLERANCE	
.XXXX	----
.XXX	0.10
.XX	0.25
.X	0.38

P/NO. SY-BS1

MATERIAL	
HOUSING	ABS UL-94V0

REV.	DESCRIPTION	ENG.	APPROVAL

TITLE WALL PLATE	CO. SY	FILE SY-BS1
DR. Breaker 2008/09/15	APPD.	CHKD.
Shiunn Yang Ent.Co.Ltd. TEL: 29089890 <REP> FAX: 29068849,29088679	SCALE /	
	UNIT mm	SIZE A4
	SHEET	REV.