Date	2006/01/19
Revision	A

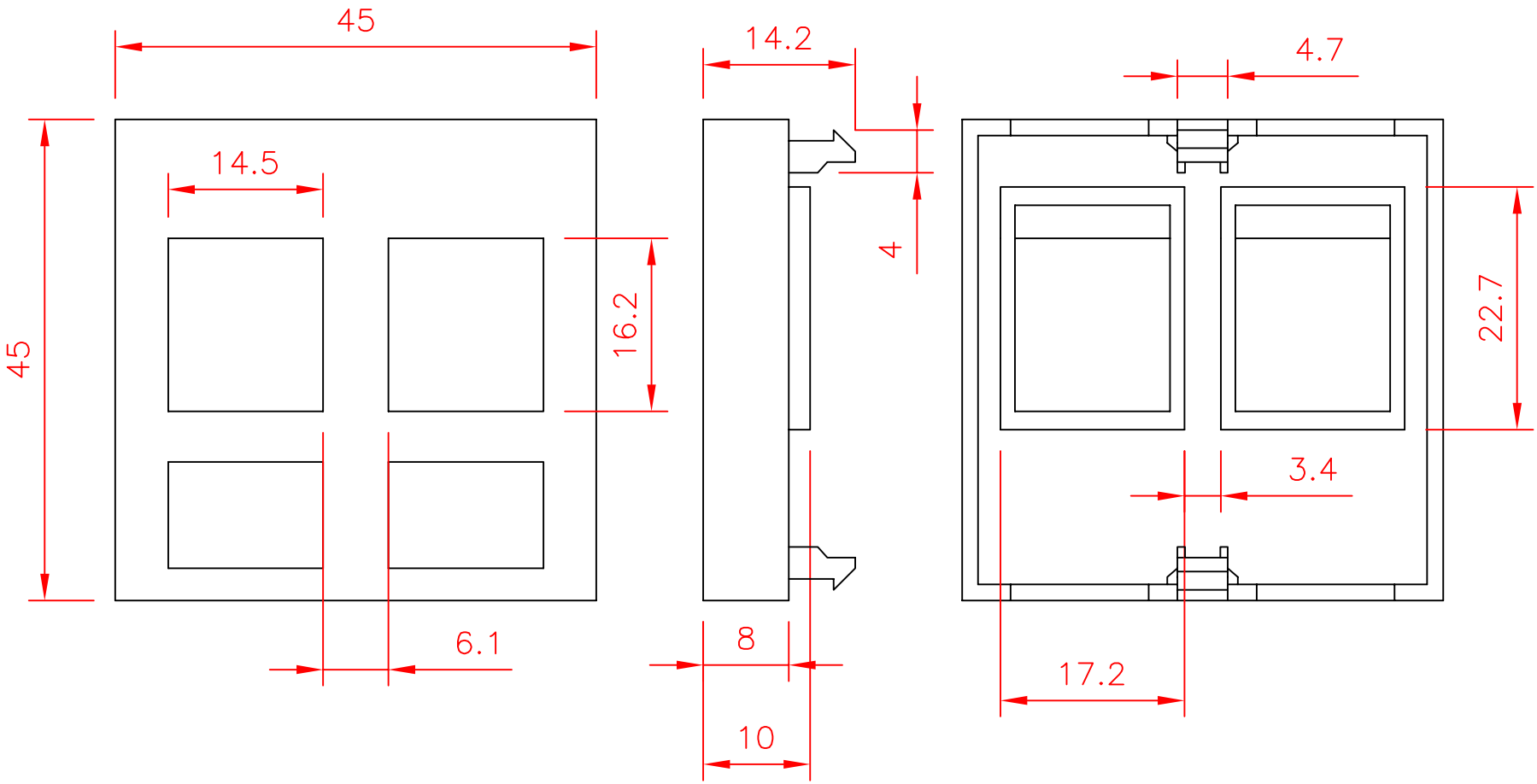

P/NO. SY-B245-2

MATERIAL
Apply UL-94V-0 high-impact,fire-retardant ABS material

REV.	DESCRIPTION	ENG.	APPROVAL

TITLE Wall plate	CO. SY	FILE SY-B245-2
DR. Hansum2006/01/19	APPD.	CHKD.
Shiunn Yang Ent.Co.Ltd. TEL: 29089890 <REP> FAX: 29068849,29088679		SCALE /
		UNIT mm / SIZE A4
		SHEET / REV.