Date	2007/01/25
Revision	A

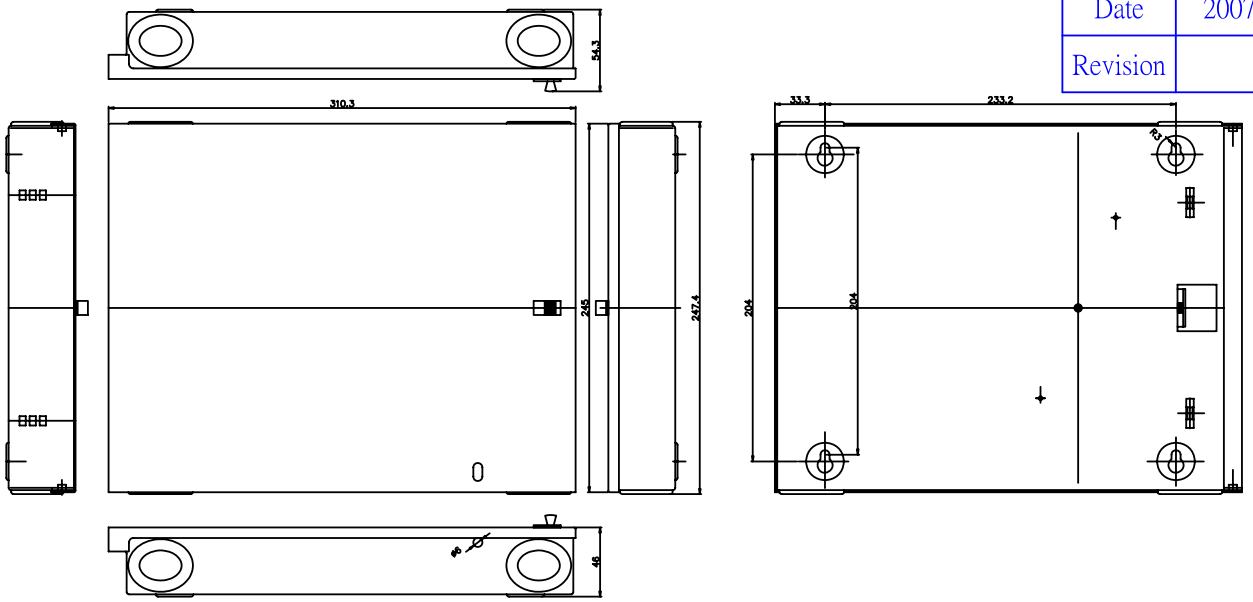

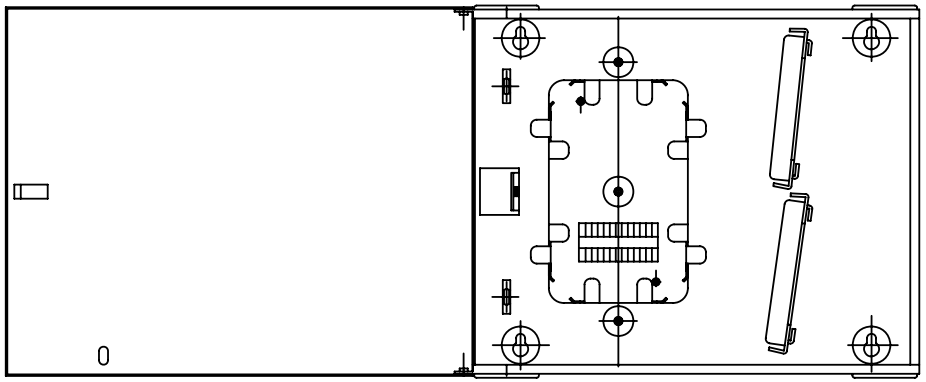

TOLERANCE	
.XXXX	----
.XXX	0.10
.XX	0.25
.X	0.38

P/NO. SY-512

TECHNICAL DATA	
MATERIAL	ALUMINUM ALLOY

REV.	DESCRIPTION	ENG.	APPROVAL

ITEM FIBER OPTIC	CO. SY	FILE SY-512
DR.Pagi2007/01/25	APPD.	CHKD.
Shiunn Yang Ent.Co.Ltd. TEL: 29089890 <REP> FAX: 29068849,29088679		SCALE /
		UNIT mm / SIZE A4
		SHEET / REV.