ROHS Compliant

Date	2009/07/15
Revision	A

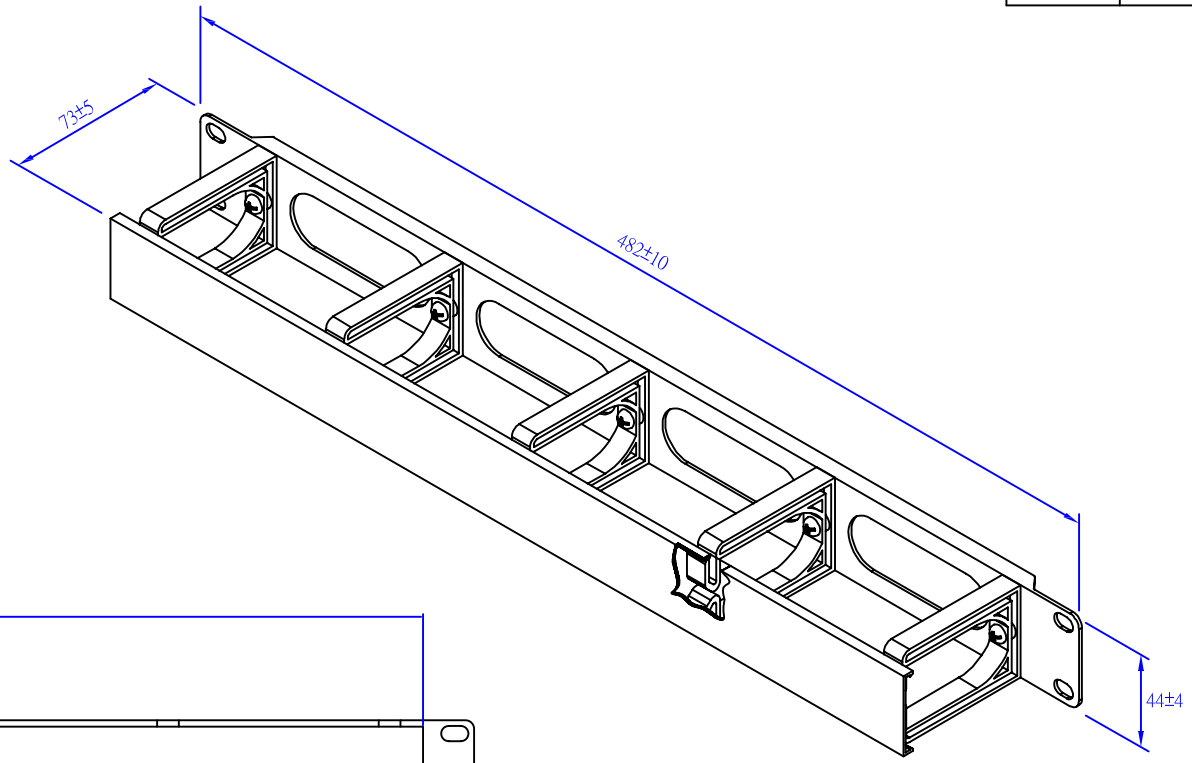

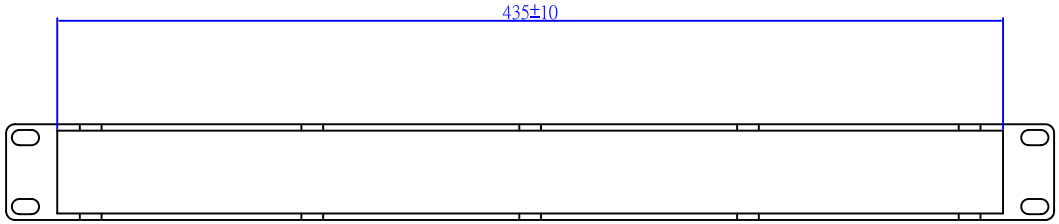

MATERIAL
PVC Cover
PC+PBT Complex (PCT)
Metallic Panel For SPCC

REV.	DESCRIPTION	ENG.	APPROVAL

P/NO. SY-507-02-1U

ITEM	CO. SY	S/N. SY-507-02-1U
DR. Breaker2009/07/15	APPD.	CHKD.
Shiunn Yang Ent.Co.Ltd. TEL: 29089890 <REP> FAX: 29068849,29088679		FILE. SY-507-02-1U
		SCALE /
		UNIT mm / SIZE A4