BT PLUG

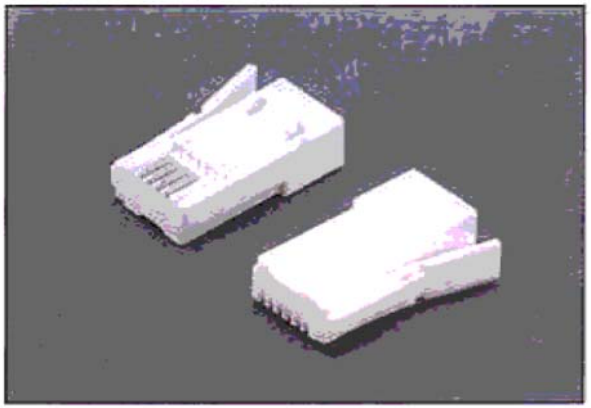

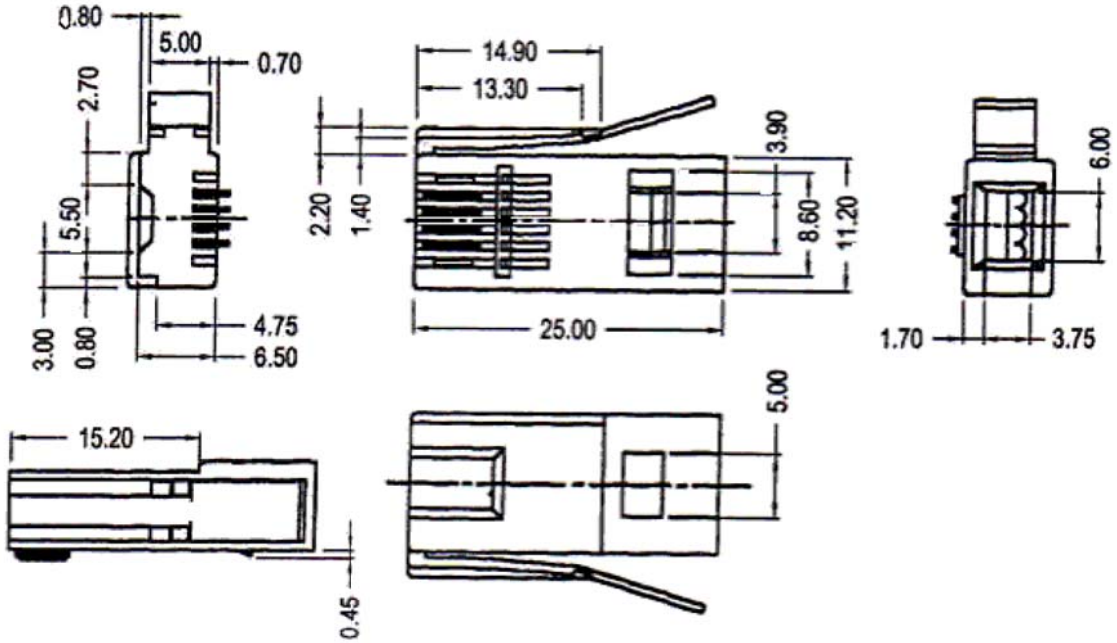

SPECIFICATIONS			
HOUSING	☐ PC UL94V-0 ☐ PC UL94V-2	TYPE OF PLUG	☐ SHIELD ☐ UNSHIELD
CONTACT	PHOSPHOR BRONZE FINE GOLD PLATED OVER NICKEL	COLD-PLATING	☐ GOLD FLASH ☐ 0.38U M/15U"MINIMUM ☐ 0.76U M/30U"MINIMUM ☐ 1.27U M/50U"MINIMUM

REV.	DESCRIPTION	ENG.	APPROVAL

TITLE MODULAR PLUG	CO. BT-PLUG	CLIE.
DR.	APPD.	CHKD.
Shiunn Yang Ent.Co.Ltd. TEL: 29089890 <REP> FAX: 29068849,29088679		SCALE /
		UNIT mm SIZE A4
		SHEET REV.