623P

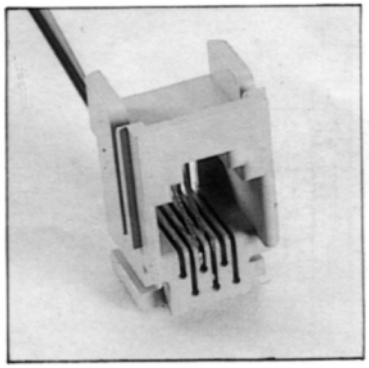

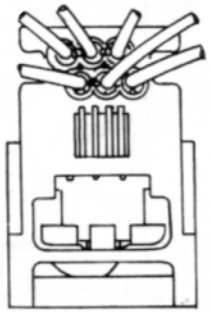

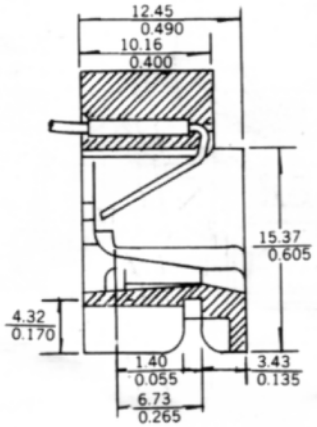

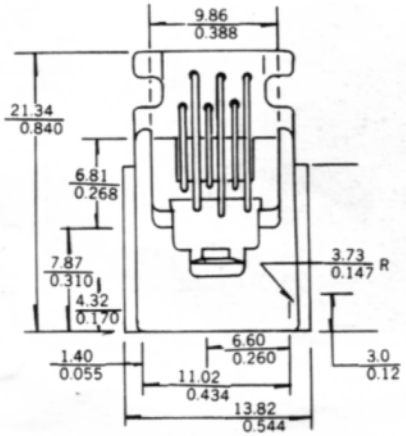

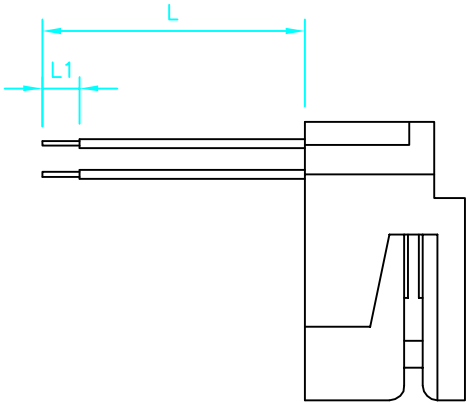

MATERIAL			
HOUSING	Standard – ABS Resin UL94V0	COLOR	☐BLACK☐IVORY☐GRAY
CONTACT	0.46 mm Dia. Phosphor Bronze, Gold plating over Nickel	L	
OPTIONAL	☐6u inch,☐15u inch,☐30u inch,☐50u inch	L1	
WIRE	UL–1061 E41396 AWM80°C VW–1 300V 26AWG, PVC Insulation		

REV.	DESCRIPTION	ENG.	APPROVAL

TITLE WIRING JACK	CO.	CLIE. 623P	
DR.	APPD.	CHKD.	
Shiunn Yang Ent.Co.Ltd. TEL: 29089890 <REP> FAX: 29068849,29088679		SCALE /	
		UNIT mm	SIZE A4
		SHEET	REV.